[Total No. of Printed Pages:3] **CODE NO:- Z-391**

FACULTY OF ENGINEERING & TECHNOLOGY

S.E (Mech/Prod)Year Examination - June– 2015

Theory of Machines-I

(Revised)

[Time: Four *Hours*] **[Max. Marks: 80]**

"Please check whether you have got the right question paper."

i) Question. No. 1 and Q. no. 6 are compulsory; attempt <u>any two</u> questions out of remaining from each section.
ii) Figures to the right indicated full marks.
iii) Draw neat sketches wherever necessary.
iv) Assume suitable data wherever necessary.

SECTION-A

Q.1 Attempt <u>any five</u>: 10

i) Define mechanism
ii) Define higher pair with one example.
iii) What is successfully constrained motion?
iv) Write the Gruebler's formula for degree of freedom of a mechanism.
v) State Grashof's law for four bar mechanism.
vi) Sketch any two inversions of single slider crank chain.
vii) Write the relation between the number of instantaneous centers and the number of links in a mechanism.
viii) Explain with the help of a neat sketch the space centrode.
ix) What will be the rubbing velocity at pin joint when the two links move in the same directions?
x) What is an acceleration image?

Q.2 The mechanism shown in figure 1 has the dimentions of various links as follows: AB=DE=150mm, BC=CD=450mm, EF=375mm. The crank AB makes an angle of 60^0 with the horizontal and rotates about A in the clockwise direction at a uniform speed of 120 r.p.m. 15

Determine:

1) Velocity of the slider F,
2) Angular velocity of DC and
3) Rubbing speed at the pin C which is 50mm in diameter.

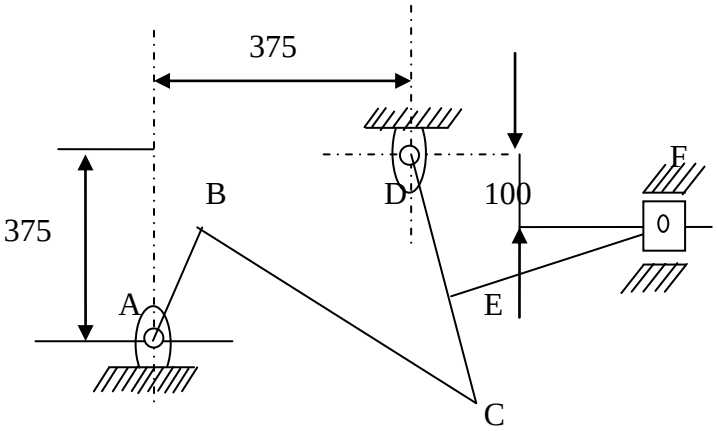

Figure-I

Q.3 Locate all the intsantaneous centres of the mechanism as shown in figure 2. The lengths of various links are : AB=150mm; BC=300mm; CD=225mm; and CE=500mm. the crank AB rotates in the anticlockwise direction at a uniform speed of 240 rpm and makes an angle of 30^0 with the horizontal; find-1 velocity of the slider E, 2. Angular velocity of the links BC and CE. 15

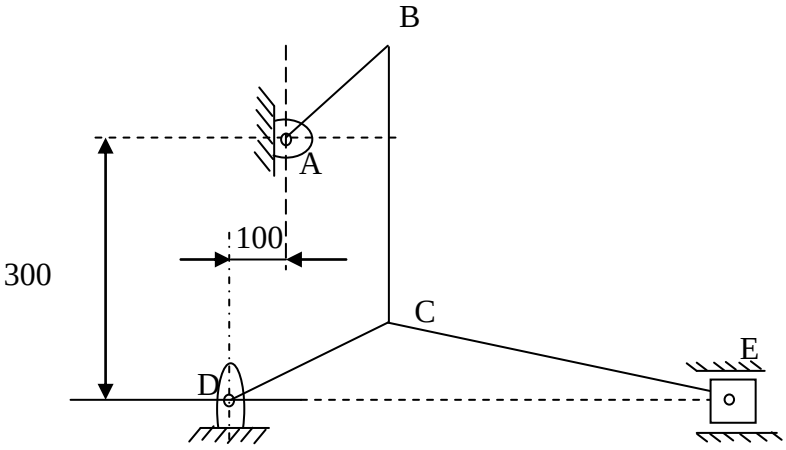

Figure-II

Q.4 In a quick return mechanism as shown in figure 3, the driving crank OA is 60 mm long and rotates at a uniform speed of 200 r.p.m. in a clockwise direction. For the position shown, find-1. Velocity of the ram R;2. Acceleration of the ram R, 3. Acceleration of the slinding block A along the slotted bar CD. 15

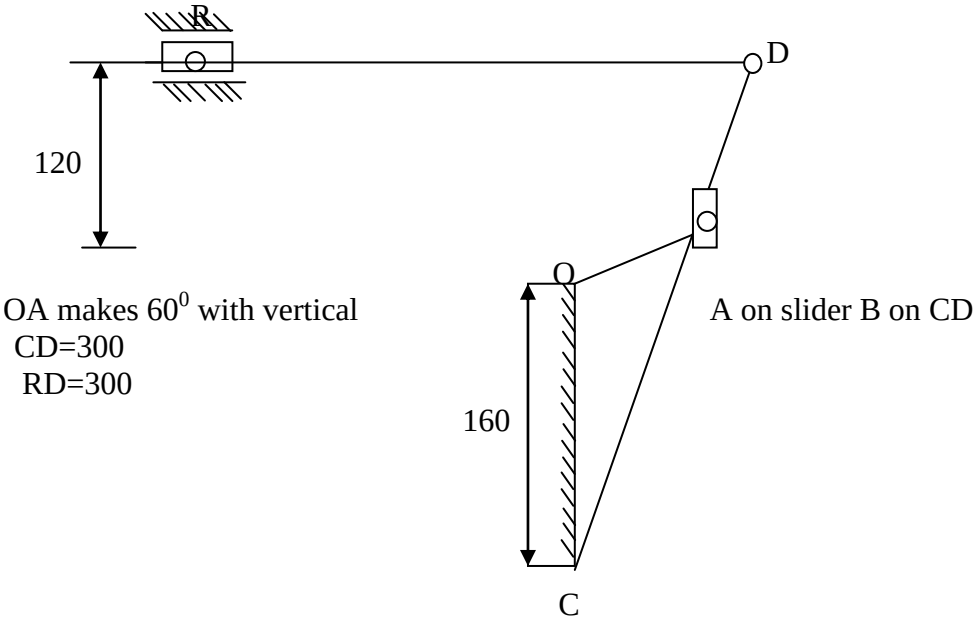

Figure-III

Q.5 In a slider crank mechanism, the length of the crank and connecting rod are 150 m and 600mm respectively. The crank rotates uniformly at 300 rpm clockwise. When the crank has turned through 60^0 from the inner dead centre, find by analytical method: 1. Velocity and acceleration of the slider, 2. Angular velocity and angular acceleration of the connecting rod. Check the result by Klein's construction. 15

SECTION-B

Q.6 Attempt <u>any five</u>: 10

i) Sketch and label the geometric elements of a cam profile.
ii) Classify cams according to shape of the follower.
iii) What is a displacement diagram in cam?
iv) What is the difference between a brake and a clutch?
v) Describe the working of band and block brake.
vi) Compare brake & dynamometer.
vii) State the concept of self locking of brake.
viii) Explain the concept of balancing.
ix) Deduce expression for swaying couple.
x) What do you mean by primary and secondary unbalance in reciprocating engines?

Q.7 A cam is to give following motion to a knife edge follower: 15

i) To raise the follower through 30 mm with uniform acceleration and deceleration during 120^0 rotation of the cam.

ii) Dwell for next 30^0 of the cam rotation

iii) To lower the follower with simple harmonic motion during the next 90^0 rotation of the cam

iv) Dwell for the rest of the cam rotation

The cam has a minimum radius of 30mm and rotates counter clockwise at a uniform speed of 840 rpm. Draw the profile of the cam if the line of stroke of the follower passes through the axis of the cam shaft. Also draw the displacement, velocity and the acceleration diagrams for the motion of the follower for one complete revolution of the cam indicating main values.

Q.8 A differential band brake has a drum with a diameter of 800mm. the two ends of the band are fixed to the pins on the opposite sides of the fulcrum of the lever at distances of 40mm and 200mm from the fulcrum. The angle of contact is 270^0 and the coefficient of friction is 0.2. determine the brake torque when a force of 600 N is applied to the lever at a distance of 800mm from the fulcrum. 15

Q.9 A shaft supported in bearings that are 1.6 m apart projects 400mm beyond bearings at each end. It carries three pulleys one at each end and one at the centre of its length. The masses of the end pulleys are 40kg and 22kg and their centres of mass at 12 mm and 18mm respectively from the shaft axis. The pulleys are arranged in a manner that they give static balance. Determine the- 15

i) Relative angular positions of the pulleys
ii) Dynamic forces developed on the bearing when the shaft rotates at 210 rpm.

Q.10 Each crank and the connecting rod of a four crank in-line engine are 200mm and 800mm respectively. The outer cranks are set at 120^0 to each other and each has a reciprocating mass of 200kg. the spacing between adjacent planes of cranks are 400mm 600mm and 500mm. if the engine is in complete primary balance, determine the reciprocating masses of the inner cranks and their relative angular positions. Also find the secondary unbalanced force if the engine speed is 210 rpm. 15